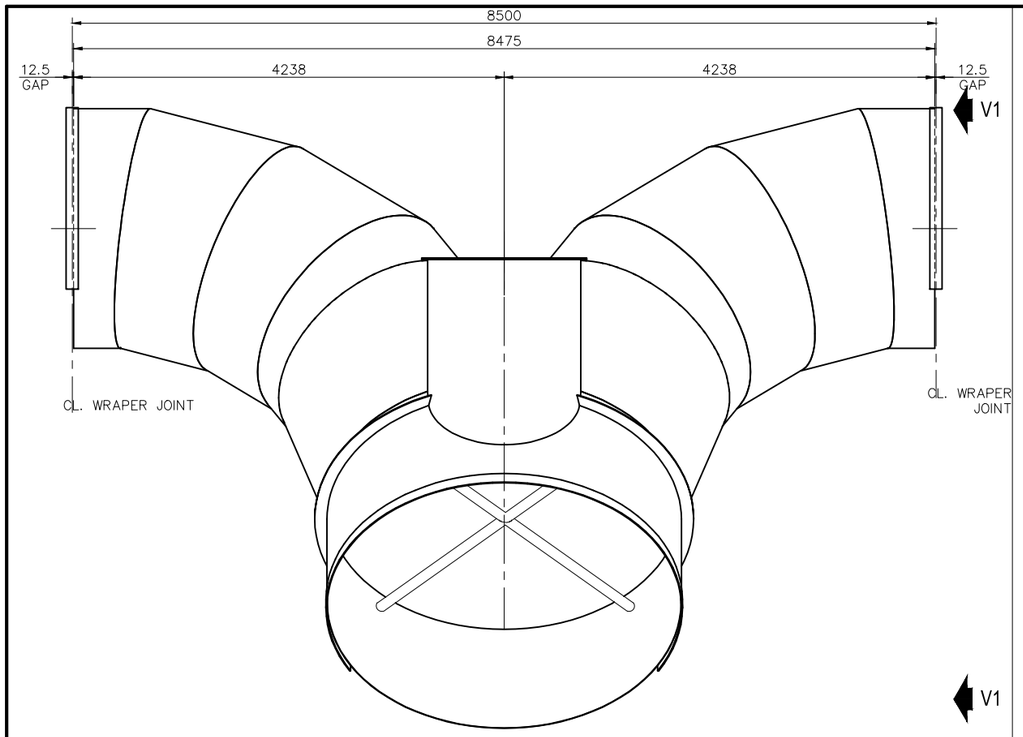

ELEVATION

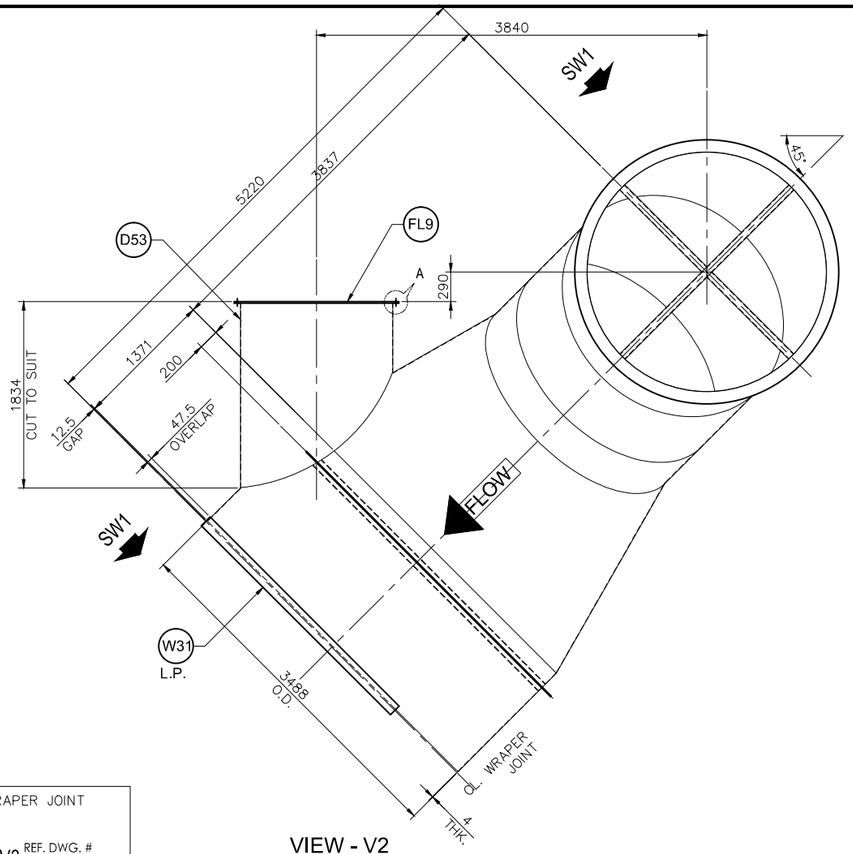

VIEW - V2

MATERIAL LIST

ERECTION Mark	Mark	Size	Grade	Qty.	Length	Weight
ASSEMBLY MK'D YD1 QTY. REQ'D. - 2 NOs.	D50	REF. DWG. # 9.9M-1503	S235 JR	2	60° BEND (ø2350x4)	1825.00
	D51	REF. DWG. # 9.9M-1504	S235 JR	1	60° 'Y' PIECE	1451.00
	D52	PL 4 THK. x 10950	S235 JR	1	1371	475.00
	W31	REF. DWG. # 9.9M-1502	S235 JR	1	WRAPER PLATE	70.00
	W41	REF. DWG. # 9.9M-1502	S235 JR	2	WRAPER PLATE	95.00
	P1	PIPE #101.6, STD. SCH. 40	S235 JR	1	3480	48.00
	P2	PIPE #101.6, STD. SCH. 40	S235 JR	2	1740	48.00
	P3	PIPE #73, STD. SCH. 40	S235 JR	1	2350	21.00
	P4	PIPE #73, STD. SCH. 40	S235 JR	2	1175	21.00
	ST3488	REF. DWG. # 9.9M-1464	S235 JR	1	RING STIFFENER	241.00
	ST2358	REF. DWG. # 9.9M-1502	S235 JR	2	RING STIFFENER	286.00
	D53	PLT. 3 THK. x 4724	S235 JR	1	1835	206.00
	FL9	PLT. 20 THK. x 556	S235 JR	1	1150	101.00
					TOTAL	4888.00 KG.

GRAND TOTAL = 9776.00 KG.

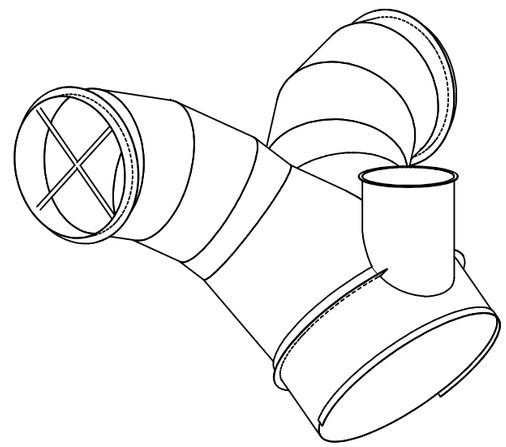

ISOMETRIC VIEW

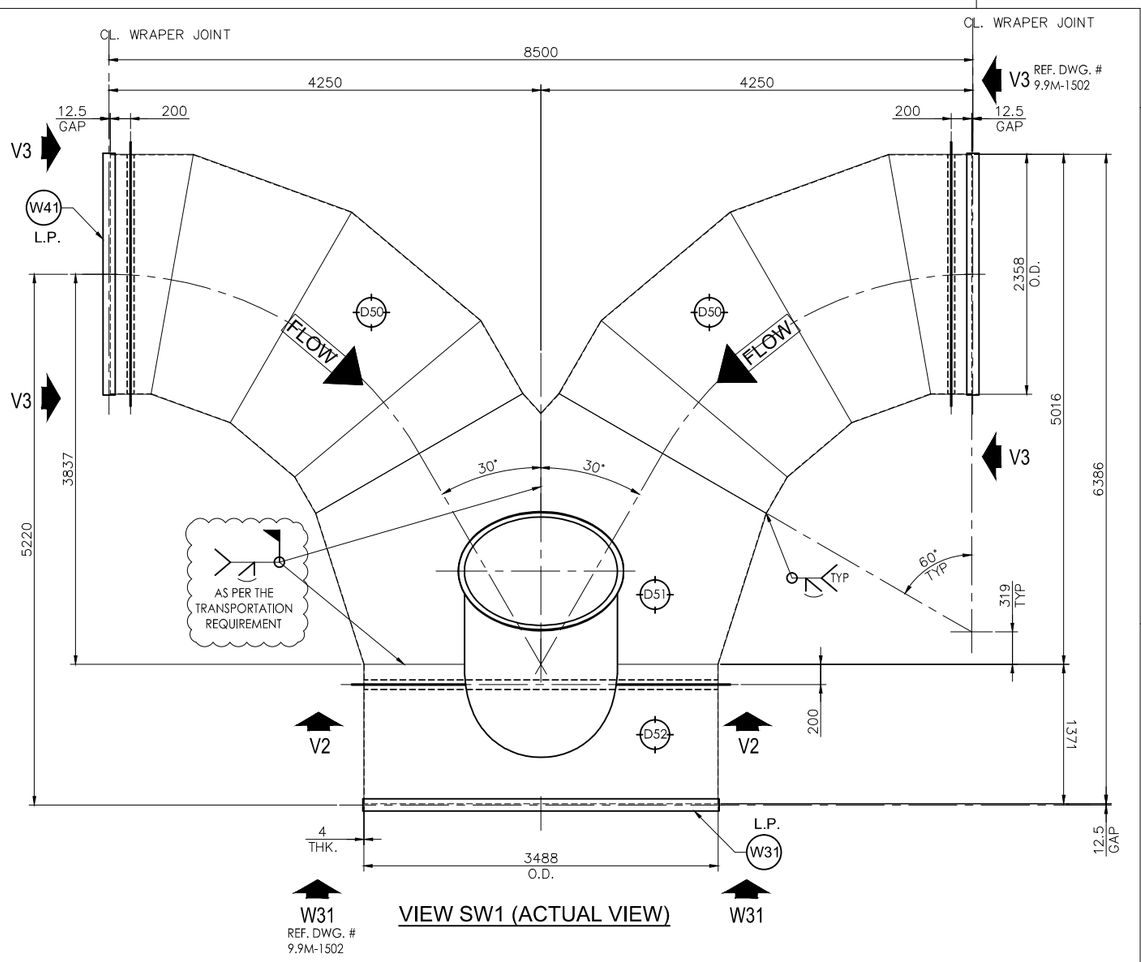

VIEW SW1 (ACTUAL VIEW)

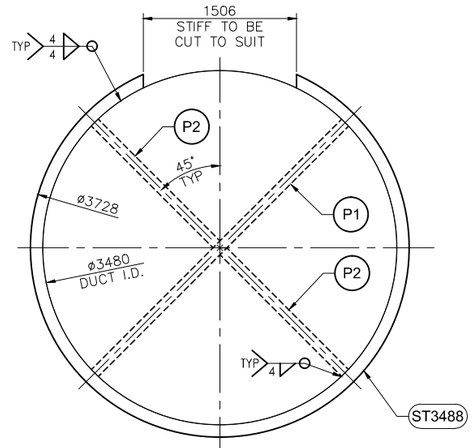

VIEW - V2

GENERAL NOTES:
1. ALL DIMENSIONS ARE IN MM, AND ALL LEVELS ARE IN M.
2. ALL WELDS ARE 3 MM CONTINUOS FILLET WELD, U.N.O.
3. ALL SHARP EDGES TO BE REMOVED
4.L.P - LOOSE PART.

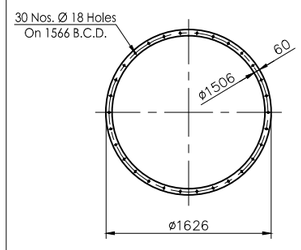

DETAIL OF FLANGE FL9

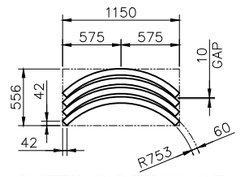

CUTTING DETAIL OF FLANGE FL9

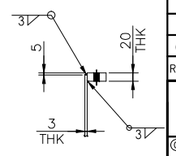

DETAIL - A

REV.	DATE	DESCRIPTION
B	15-06-2012	ALSTOM COMMENTS INCORPORATED
A	27-05-2012	ISSUED FOR APPROVAL

Tscon Integrated Steel Construction Co. L.L.C.

REV	DATE	DESCRIPTION	DRAWN	CHECKED	APPROVED
01	16-06-12	ISSUED FOR FABRICATION	SCAD	SCAD	JLK

ALSTOM Power Environment Environmental Control Systems — Competence Center, Aluminium

© This document is, unless otherwise agreed in writing, the property of ALSTOM Norway AS, and shall not be reproduced, copied, disclosed to any third party or used for any other purpose other than that for which it is supplied or disclosed.

EMAL PHASE II - GAS TREATMENT CENTRES (GTC)
GTC 5332
DETAILS OF DUCT YD1

Date	Drawn by	Checked by	Approved	Assembly No.	Sub No.	Scale
16-06-12	SCAD	SCAD	JLK	9.9M-1276	sub no	1:30

Drawing No. EE3-000567 - 9.9M-1501 Rev. 01

Last Print Date $DATE$ $TIME$ $FILE$